THIS COPY IS PROVIDED ON A RESTRICTED BASIS AND IS NOT TO BE USED IN ANY WAY DETRIMENTAL TO THE INTERESTS OF PANDUIT CORP.

NOTES:

1. MATERIAL:
   BODY - ALUMINUM, TIN PLATED
   SCREW - ALUMINUM, TIN PLATED
2. UL LISTED & CSA CERTIFIED FOR USE UP TO 600V & TEMPERATURE RATED 90°C (AL9CU)
   NOTE: LAM3B2-56-6Y IS cULus
3. DUAL RATED FOR USE WITH COPPER OR ALUMINUM STRANDED CODE CONDUCTOR
4. THESE PARTS ARE RoHS COMPLIANT
5. USE OF OXIDE INHIBITING JOINT COMPOUND LIKE PANDUIT CMP-100 RECOMMENDED FOR PAD TO PAD AND CONDUCTOR SURFACES
6. (A) SEE INSTRUCTION SHEET T-PMPI-223-PC FOR TIGHTENING TORQUE INFORMATION
7. PKG QTY:
   6 = 6
   3 = 3
   1 = 1
8. ** DENOTES NEMA HOLE SPACING

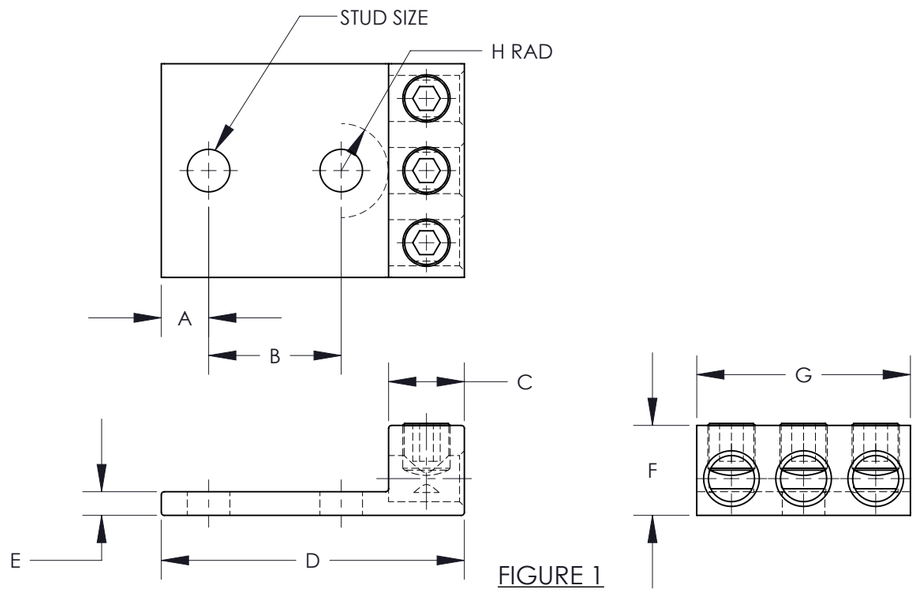

FIGURE 1

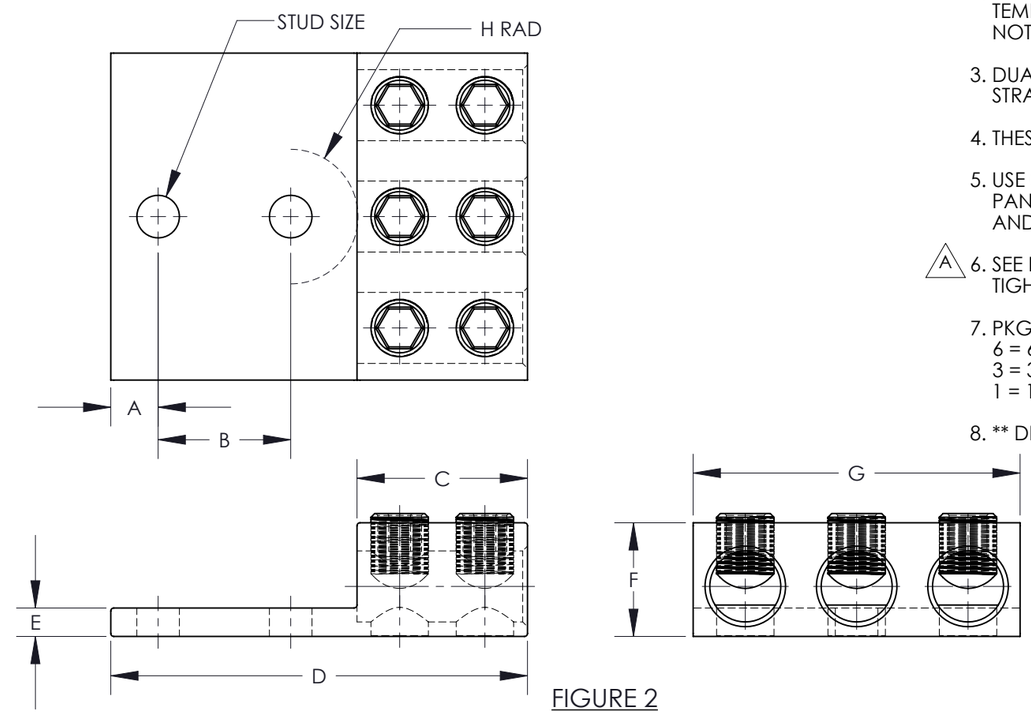

FIGURE 2

PART NUMBER	FIGURE	STUD SIZE	DIMENSIONS - IN [mm] +/-.02 [.5]								WIRE RANGE	HEX KEY*
			A	B	C	D	E	F	G	H		
LAM3B2-14-6Y	1	5/16	0.31 [7.9]	0.88 [22.4]	0.46 [11.7]	2.49 [63.2]	0.19 [4.8]	0.47 [11.9]	1.63 [41.4]	0.84 [21.3]	2-14 AWG	SLOTTED
LAM3B1/0-38-6Y	1	3/8	0.34 [8.6]	1.00 [25.4]	0.75 [19.1]	2.91 [73.9]	0.25 [6.4]	0.88 [22.4]	2.00 [50.8]	0.81 [20.6]	1/0-14 AWG	SLOTTED
LAM3B3/0-12-3Y	1	1/2	0.63 [16.0]	**1.75 [44.5]	1.00 [25.4]	4.25 [108.0]	0.31 [7.9]	1.19 [30.1]	2.81 [71.4]	0.88 [22.2]	3/0-6 AWG	1/4"
LAM3B250-12-1Y	1	1/2	0.63 [16.0]	**1.75 [44.5]	1.00 [25.4]	4.00 [101.6]	0.31 [7.9]	1.19 [30.1]	2.82 [71.6]	0.63 [16.0]	250kcmil - 6 AWG	5/16"
LAM3B350-12-1Y	1	1/2	0.63 [16.0]	**1.75 [44.5]	1.25 [31.8]	4.50 [114.3]	0.31 [7.9]	1.38 [35.1]	3.50 [88.9]	0.88 [22.2]	350kcmil - 6 AWG	5/16"
LAM3LB600-12-1	2	1/2	0.63 [16.0]	**1.75 [44.5]	2.25 [57.2]	5.50 [139.7]	0.38 [9.7]	1.50 [38.1]	4.32 [109.7]	0.88 [22.2]	600kcmil - 2 AWG	3/8"
LAM3LB1000-121Y	2	1/2	0.63 [16.0]	**1.75 [44.5]	2.75 [69.9]	6.19 [157.2]	0.56 [14.2]	1.88 [47.8]	5.27 [133.9]	1.06 [26.9]	1000-500kcmil	1/2"

* HEX SIZE MAY DIFFER FROM CHART. DIFFERENCE IN SIZE WILL NOT AFFECT FIT, FORM, OR FUNCTION OF PART

REV	DATE	BY	CHK	APR	DESCRIPTION	ECN
07	8/22	JHNU	JHNU	ALP	A. REVISED NOTE 6 TO REFERENCE INSTRUCTION SHEET T-PMPI-223-PC	125543
06	12/19	JHNU	JHNU	RGB	REMOVED LAM3B2-56-6Y ADDED LAM3B2-14-6Y	N41561BA-C41561
05	2/13	JHNU	JHNU	RGB	REVISED TITLE BLOCK	N41561BA-C41561

TITLE
LAM3B, LAM3LB SERIES ALUMINUM MECHANICAL LUGS
CUSTOMER DRAWING

ITEM REVISION NAME: N41561BA/07

DATASET FILE NAME: C41561 r07.SLDDRW

PANDUIT

UNLESS OTHERWISE SPECIFIED,
DIMENSIONAL TOLERANCES ARE: IN [mm]
.X ± .XXX ±
.XX ± ANGLES ±
THIRD ANGLE PROJECTION

MATERIAL: SEE NOTES

DRAWING NUMBER: C41561

DRAWN BY	DATE	CHK	SCALE	SHEET	SIZE
JHNU	2/06	JHNU	NONE	SHEET 1 OF 1	B