THIS COPY IS PROVIDED ON A RESTRICTED BASIS AND IS NOT TO BE USED IN ANY WAY DETRIMENTAL TO THE INTERESTS OF PANDUIT CORP.

NOTES:

1. BONDING GROUNDING NUTS
   PART NUMBER: BGN-C
   BGN1032-C
   BGNM6-C
   BGNM5-C

2. DIMENSIONS IN PARENTHESIS ARE MILLIMETERS.

3. ALL COMPONENTS THAT MAKE UP THIS KIT ARE RoHS COMPLIANT.

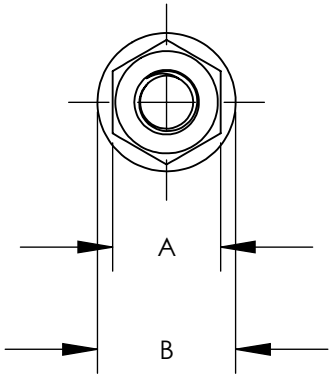

BONDING NUT (QTY. 100)

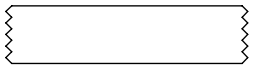

5cc TUBE ANTI-OXIDANT PASTE (QTY. 1)

PART NUMBER	BONDING NUT		B	B
	SIZE	QTY.	A	B
BGN-C	#12-24	100	.44 [11.1]	.58 [14.7]
BGN1032-C	#10-32	100	.38 [9.5]	.46 [11.7]
BGNM6-C	M6	100	.39 [10.0]	.52 [13.2]
BGNM5-C	M5	100	.38 [9.5]	.46 [11.7]

A

REV	DATE	BY	CHK	APR	DESCRIPTION	ECN
01	11/22	JHNU	JHNU	JADE	B. ADDED COLUMNS FOR BONDING NUT DIMENSIONS A. REVISED TITLE BLOCK	127180
00	2/07	JHNU	JMAR	JAC	DRAWING RELEASED	PC00674

TITLE

BONDING GROUNDING NUTS
(BGN-C, BGN1032-C, BGNM6-C, BGNM5-C)
CUSTOMER DRAWING

ITEM REVISION NAME: N41701BB/01

DATASET FILE NAME: N41701BB-C41701 r01.SLDDRW

PANDUIT

UNLESS OTHERWISE SPECIFIED,
DIMENSIONAL TOLERANCES ARE: IN [mm]

.X ± .XXX ±
.XX ± ANGLES ±

THIRD ANGLE PROJECTION

MATERIAL

DRAWING NUMBER: C41701

DRAWN BY	DATE	CHK	SCALE	SHEET 1 OF 1	SIZE
JHNU	2/07	JMAR	N/A		A