THIS COPY IS PROVIDED ON A RESTRICTED BASIS AND IS NOT TO BE USED IN ANY WAY DETRIMENTAL TO THE INTERESTS OF PANDUIT CORP.

| PANDUIT PART NUMBER | STUD SIZE | DIMENSIONS - in. | | | | | TOOLS |
|---|---|---|---|---|---|---|---|
| | | A ± .020 | W ± .010 | C ± .015 | M ± .020 | H ±.010 | |
| PN14-6LF | #6 | .86 (21.84) | .25 (6.35) | .22 (5.59) | .62 (15.75) | .14 (3.56) | *CT-100A<br>**CT-400<br>**CT-460<br>**CT-600-A (CT-500CH)<br>**CT-600-A (CT-550CH)<br>**CT-1550<br>**CT-1551<br>**CT-2500 (CT-2550CH) |
| PN14-6LFW | #6 | .84 (21.34) | .29 (7.37) | .22 (5.59) | .62 (15.75) | .14 (3.56) | |
| PN14-8LF | #8 | .92 (23.37) | .29 (7.37) | .25 (6.35) | .67 (17.02) | .16 (4.06) | |
| PN14-10LF | #10 | .91 (23.11) | .33 (8.38) | .25 (6.35) | .67 (17.02) | .19 (4.83) | |
| PN14-10LFN | #10 | .91 (23.11) | .28 (7.11) | .25 (6.35) | .67 (17.02) | .19 (4.83) | |

*FOR USE ON #16-14 AWG SOLID OR STRANDED COPPER WIRE
**FOR USE ON #18-14 AWG SOLID OR STRANDED COPPER WIRE

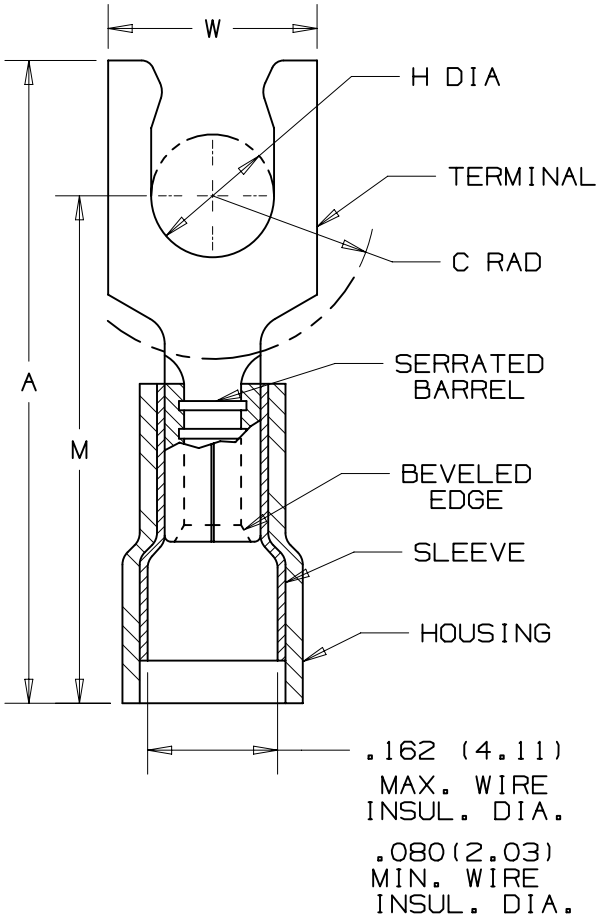


NOTES:

1. cULus LISTED FOR:
   A. 600V MAX. BLDG WIRE
      (1000 V MAX. IN SIGNS, FIXTURES & LUMINARIES)
   B. 221° F (105° C) MAX TEMP. RATING
2. SEE WWW.PANDUIT.COM FOR PACKAGE QUANTITIES
3. MATERIAL:
   A. STAMPING - .032" THK, COPPER
      TIN PLATED
   B. HOUSING - NYLON, BLUE
   C. SLEEVE - BRASS, TIN PLATED
4. DIMENSIONS IN BRACKETS ARE IN MILLIMETERS
5. WIRE STRIP LENGTH: 7/32 + 1/32 (5.6 + .8)
   - 0 - 0

c UL us
LISTED
587H
E52164

| REV | DATE | BY | CHK | APR | DESCRIPTION | ECN |
|---|---|---|---|---|---|---|
| 09 | 06/14 | MBY | JHNU | RGB | REVISED NOTES, MOVED TOOLS TO TABLE, REVISED CERTIFICATION, UPDATED BORDER | N41291BA-A41291 |

TITLE
# #16-14 BARREL NYLON INSULATED LOCKING FORK, .162 [4.11] MAX. WIRE INSULLATION DIAMETER

CUSTOMER DRAWING

ITEM REVISION NAME: N41291BA/09

DATASET FILE NAME: N41291BA/09

PANDUIT

UNLESS OTHERWISE SPECIFIED, DIMENSIONAL TOLERANCES ARE: IN [mm]
.X ± .XXX ±
.XX ± ANGLES ±
THIRD ANGLE PROJECTION

MATERIAL: SEE NOTES

DRAWING NUMBER: A41291

| DRAWN BY | DATE | CHK | SCALE | SHT 1 OF 1 | SIZE |
|---|---|---|---|---|---|
| DW | | RLS | NONE | | A |

D10100DA/16