THIS COPY IS PROVIDED ON A RESTRICTED BASIS AND IS NOT TO BE USED IN ANY WAY DETRIMENTAL TO THE INTERESTS OF PANDUIT CORP.

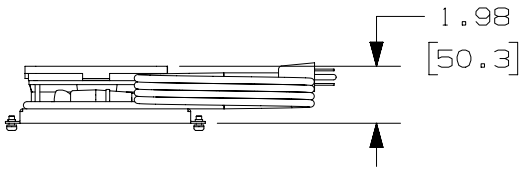

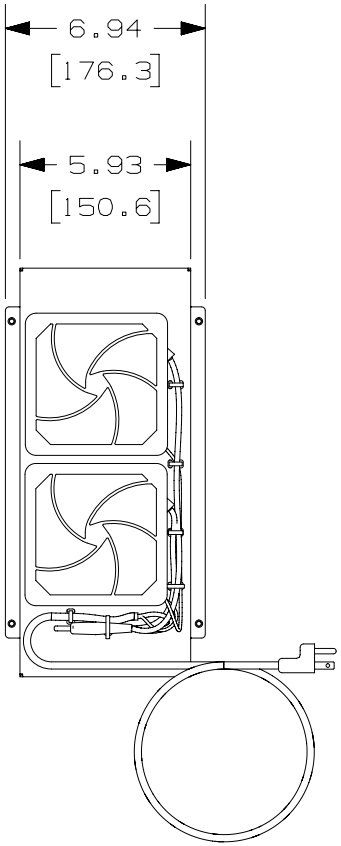

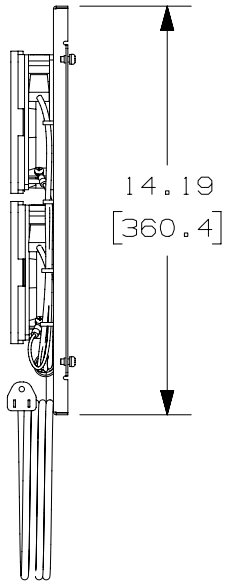

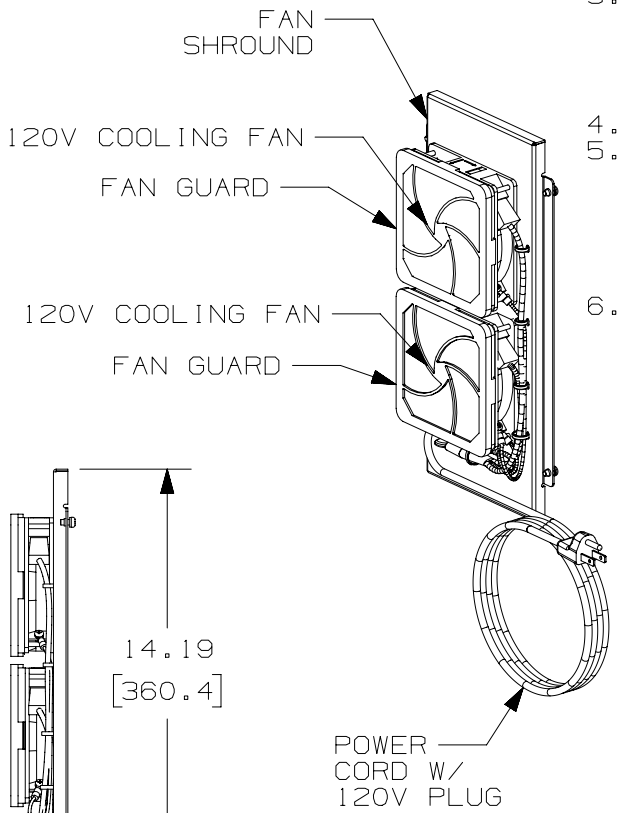

NOTES:
1. VISIT OUR ON-LINE CATALOG AT WWW.PANDUIT.COM FOR A LIST OF CURRENT PARTS APPLICABLE FOR USE WITH THIS PRODUCT.
2. DIMENSIONS IN [ ] ARE METRIC.
3. ALL MATERIALS AND COMPONENTS USED MEET THE MATERIAL RESTRICTIONS OF RoHS (EUROPEAN DIRECTIVE 2011/65/EU ON THE RESTRICTION OF HAZARDOUS SUBSTANCES) AS PROPOSED BY THE RoHS TECHNICAL ADAPTATION COMMITEE.
4. WEIGHT: 3.5 LB [1.59 Kg]
5. PART INCLUDES:
   (2) AC AXIAL FAN
   (1) FAN SHROUD
   (2) FAN GUARD
   (1) 6FT LONG POWER CORD
   (1) HARDWARE KIT
6. FAN RATING:
   VOLTAGE - 120V AC
   CFM - 61 CFM (122 TOTAL CFM)
   CE MARKED FOR EU LVD

PART NUMBER
PZWMCFKHF

TITLE
PAN ZONE CABINET HIGH FLOW FAN KIT 120V

CUSTOMER DRAWING

ITEM REVISION NAME
00198EAZ/02

DATASET FILE NAME
00198EAZ_DC/02A

THIRD ANGLE PROJECTION

PANDUIT

MATERIAL
STEEL HOUSING & FAN ASSEMBLY

DRAWING NUMBER
00198EAZ-DC

DRAWN BY	DATE	CHK	SCALE	SIZE
TWV	12-13-18	KZU	NONE	A

SHEET 1 OF 1

REV	DATE	BY	CHK	APR	DESCRIPTION	ECN
00A	01/17/19	MDJR	KZU	MINO	INITIAL RELEASE	00198EAZ-DC

A-SIZE CUSTOMER